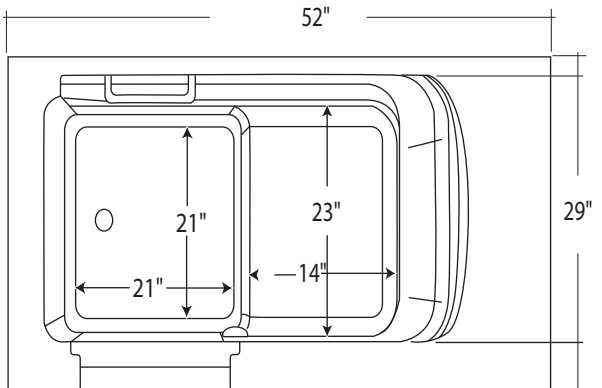
52"
29"
21"
21"
23"
14"

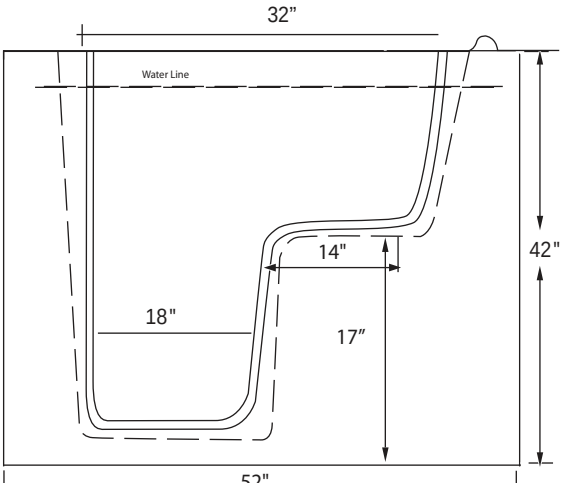
32"
Water Line
42"
14"
18"
17"
52"