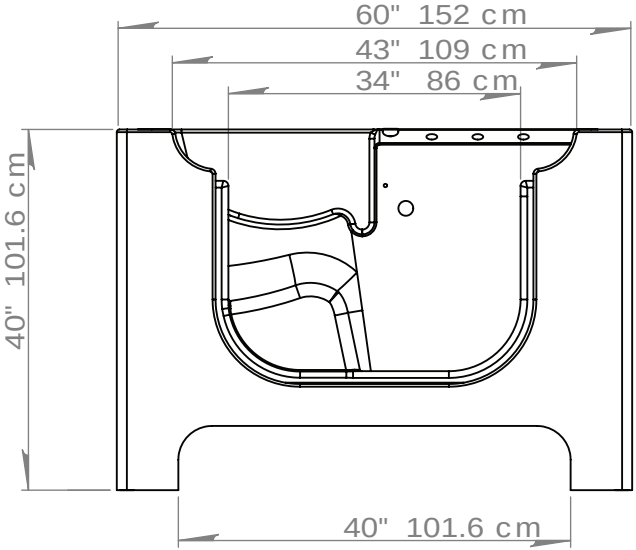
60" 152 cm
43" 109 cm
34" 86 cm
40" 101.6 cm
40" 101.6 cm

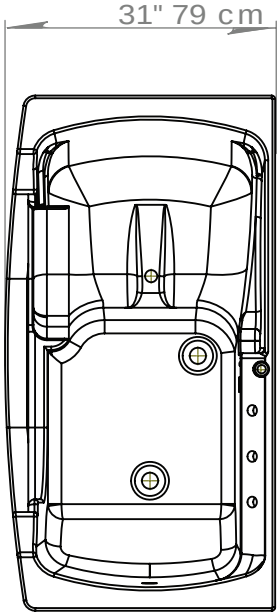
31" 79 cm